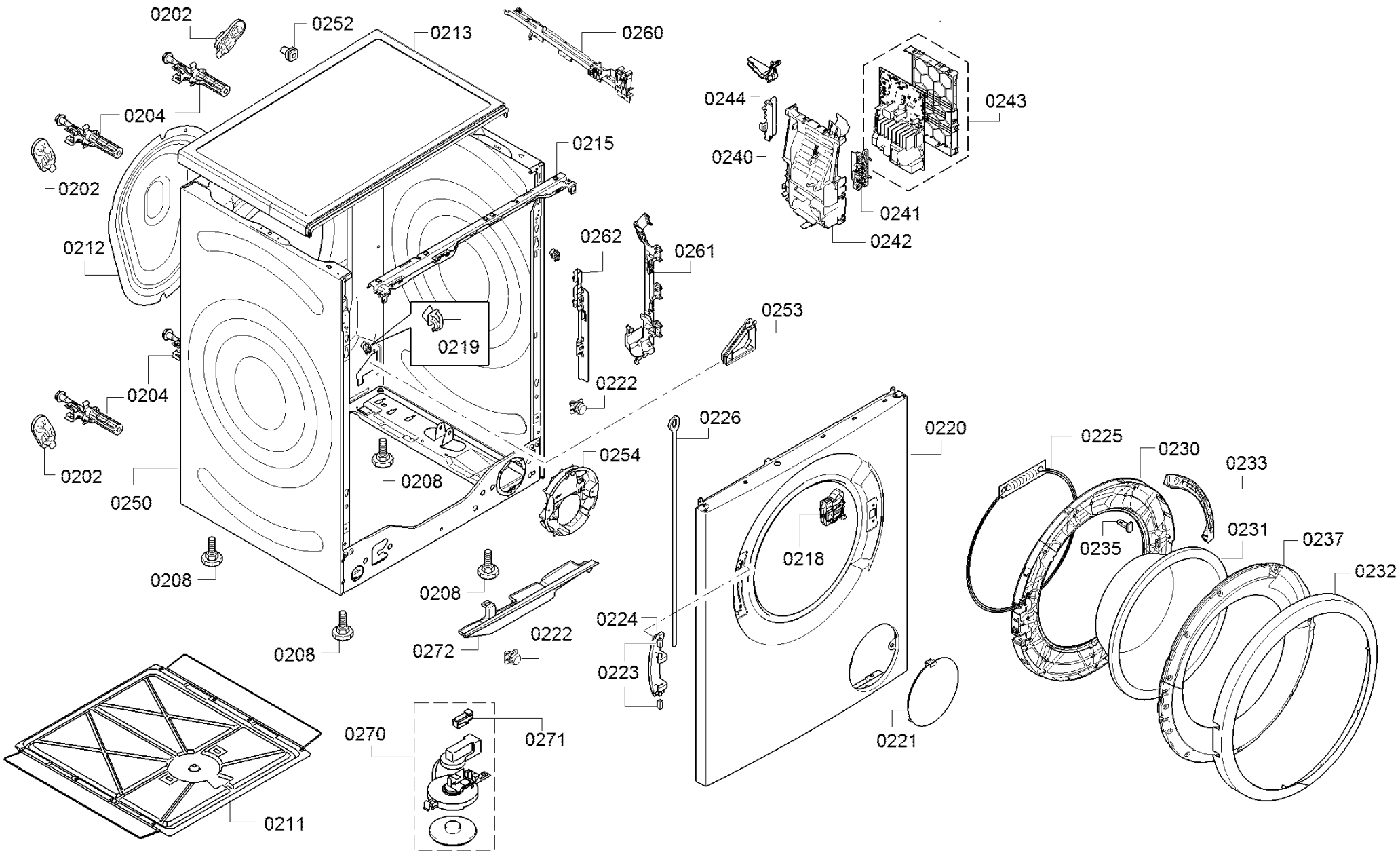

58300000191014 aet 002 b