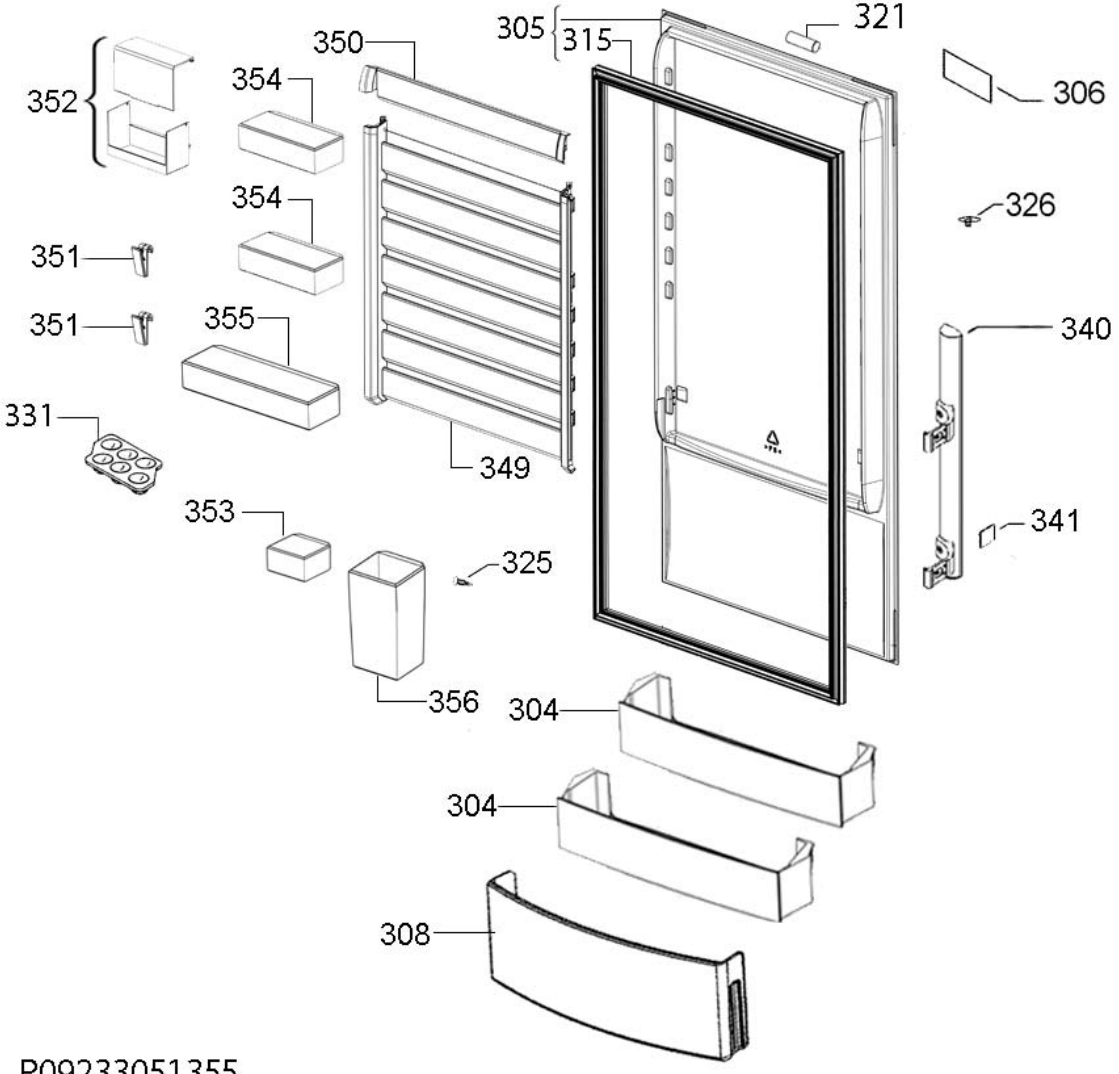

P09233051355