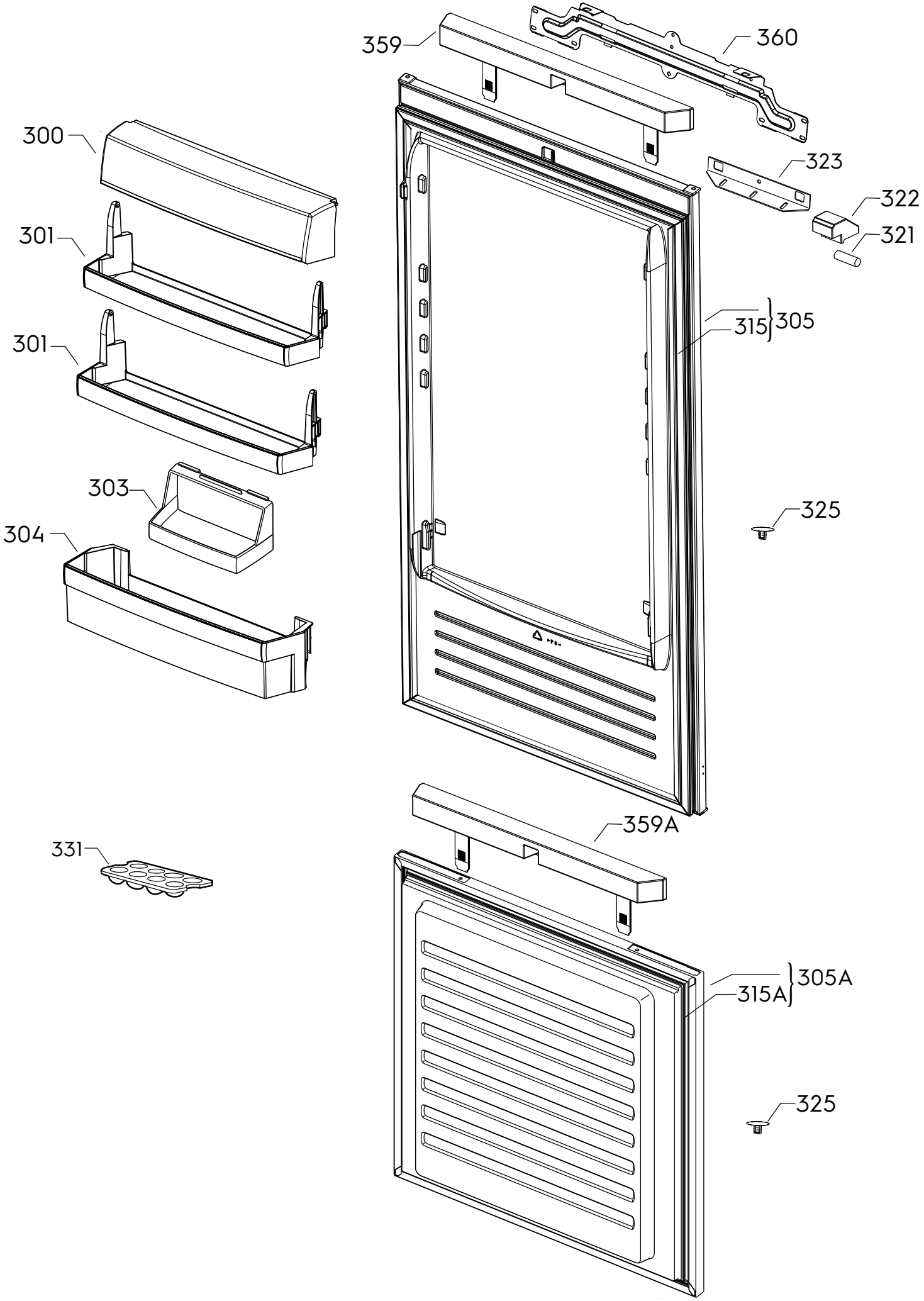

P09253096654