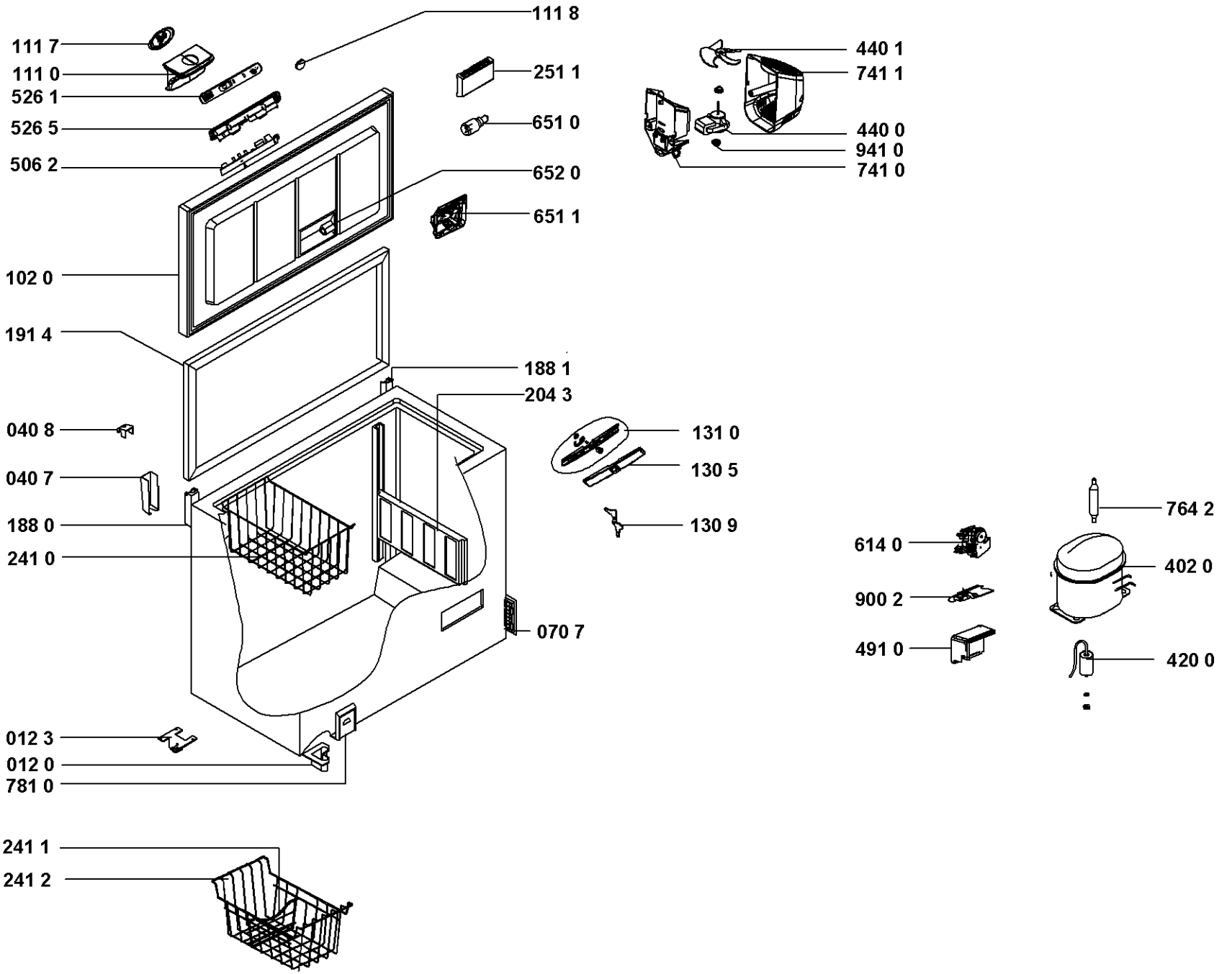

4000 105 08835