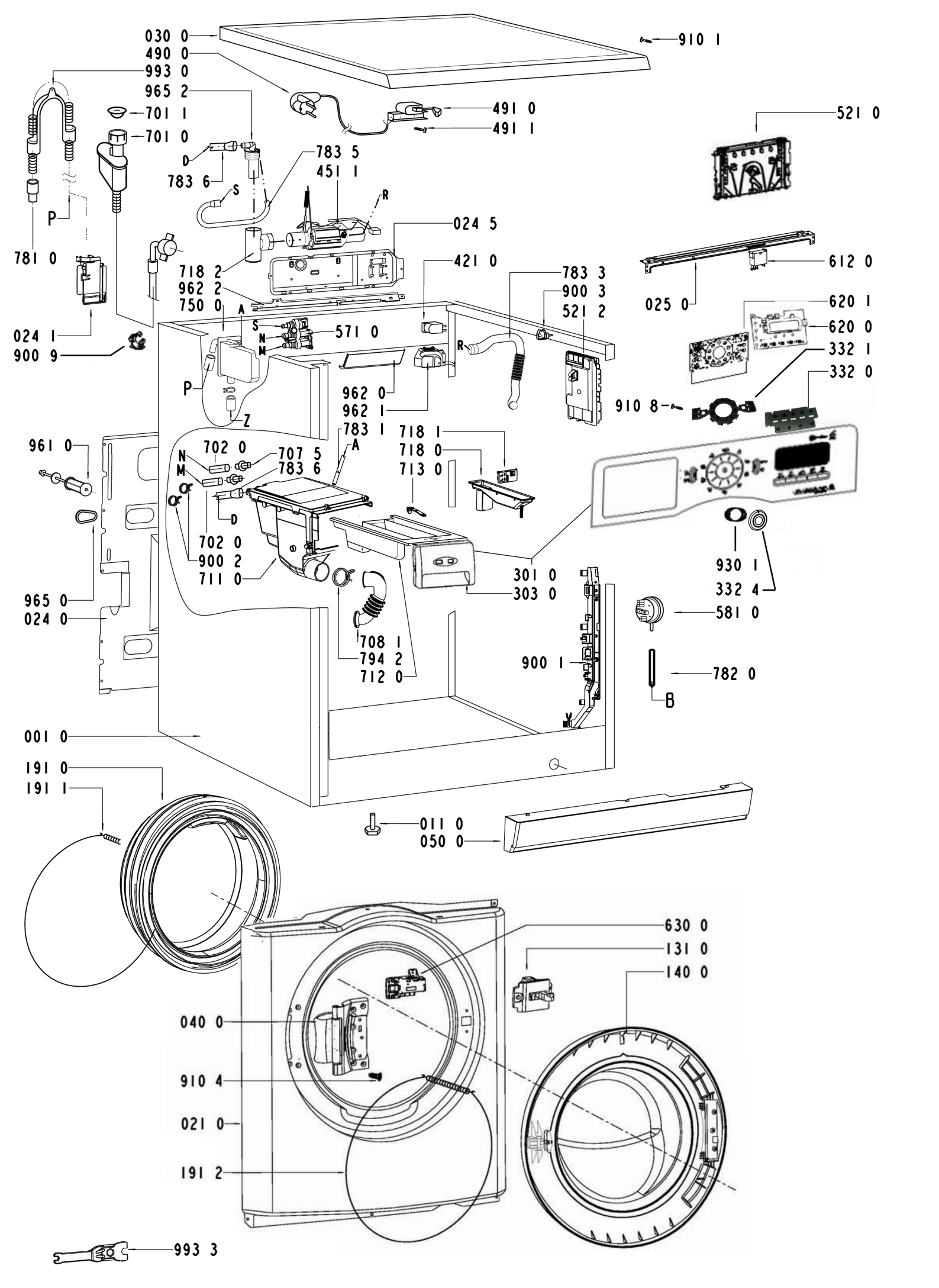

8592 980 18400