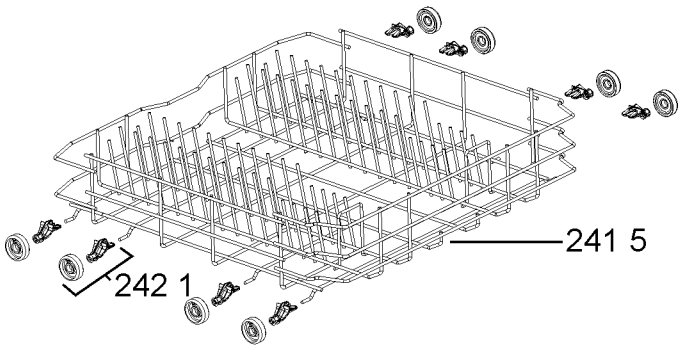

X

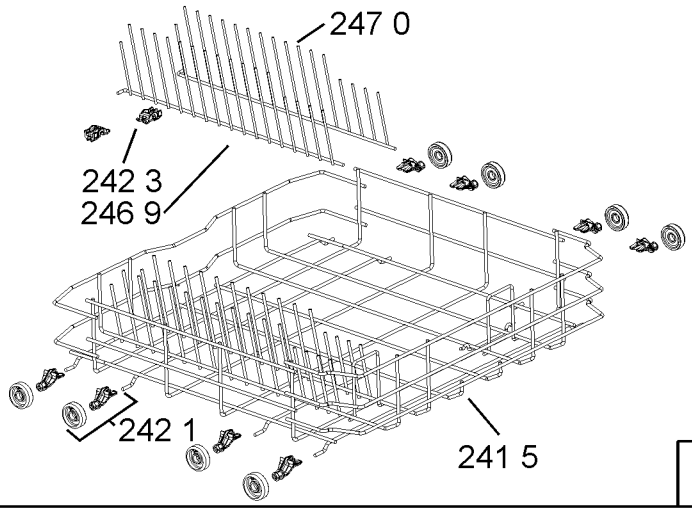

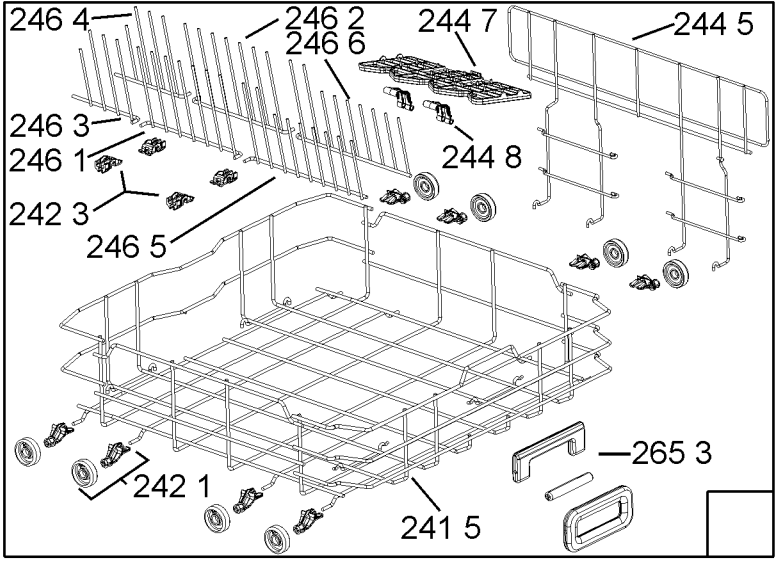

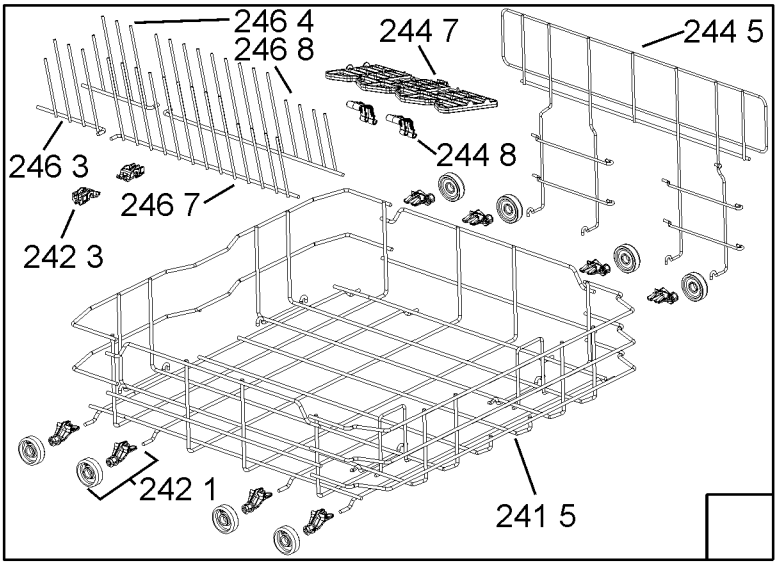

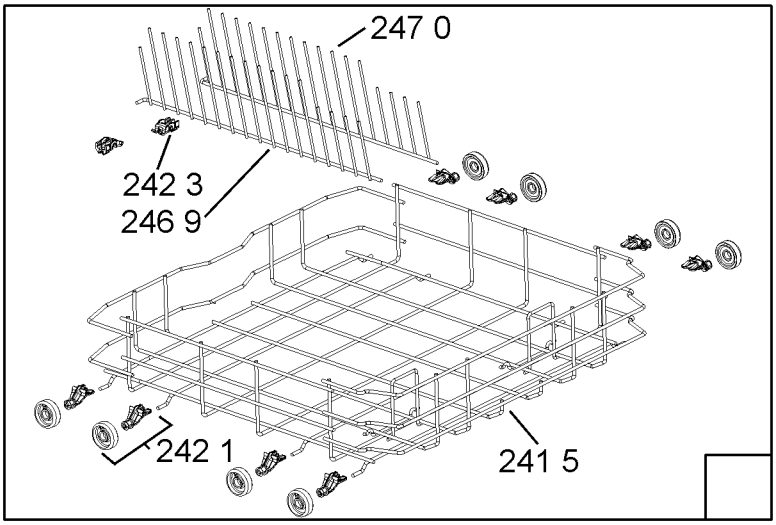

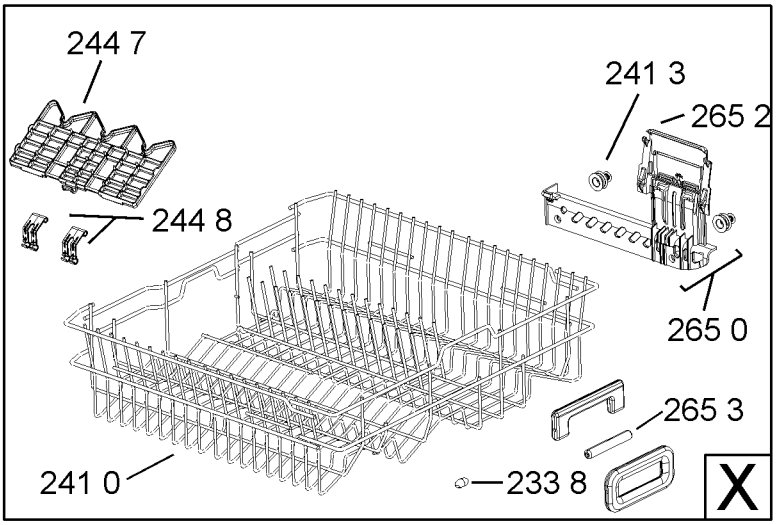

X

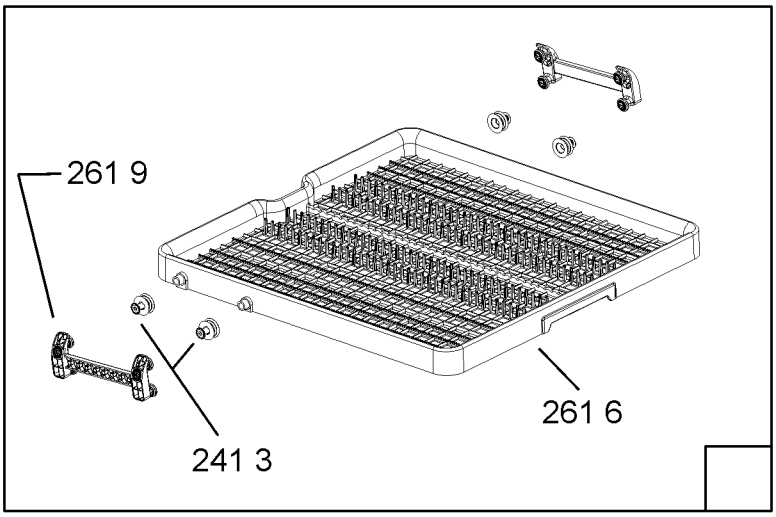

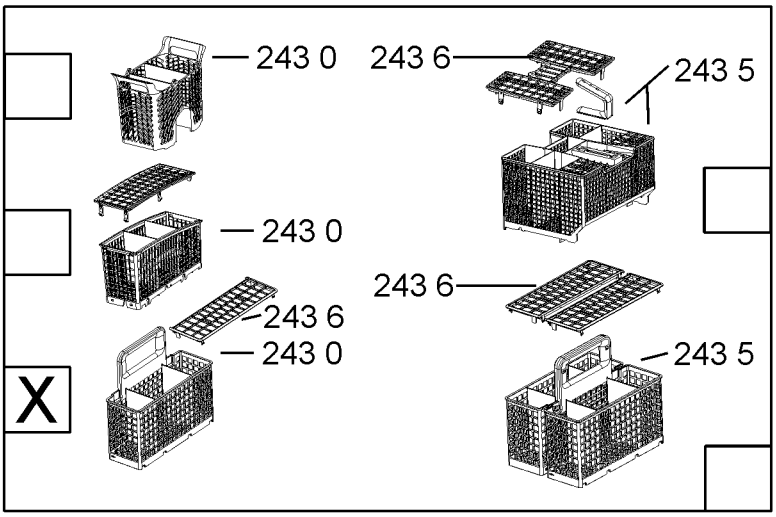

X

400010492375