0199

0198

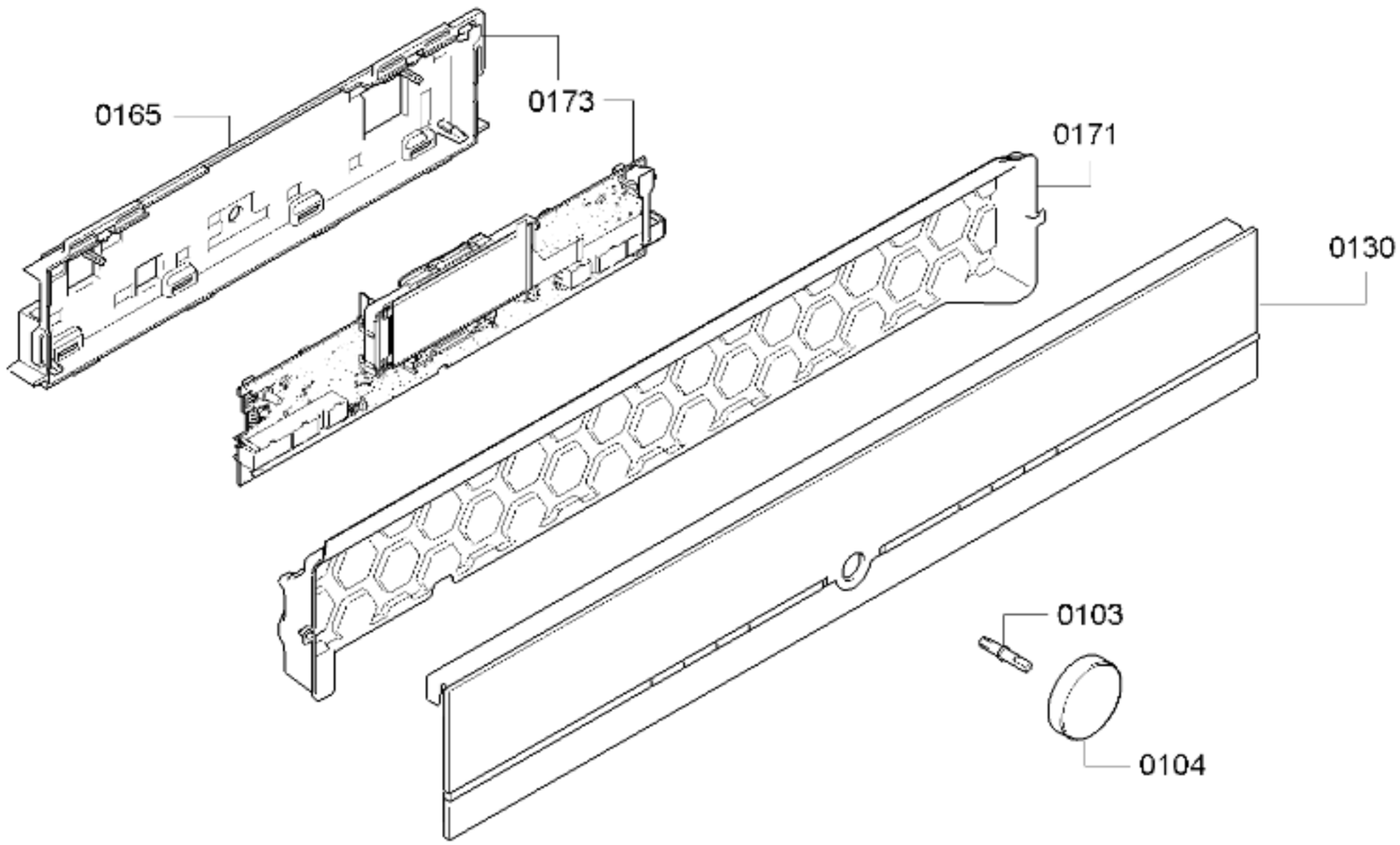


58300000178084 aet 001 b

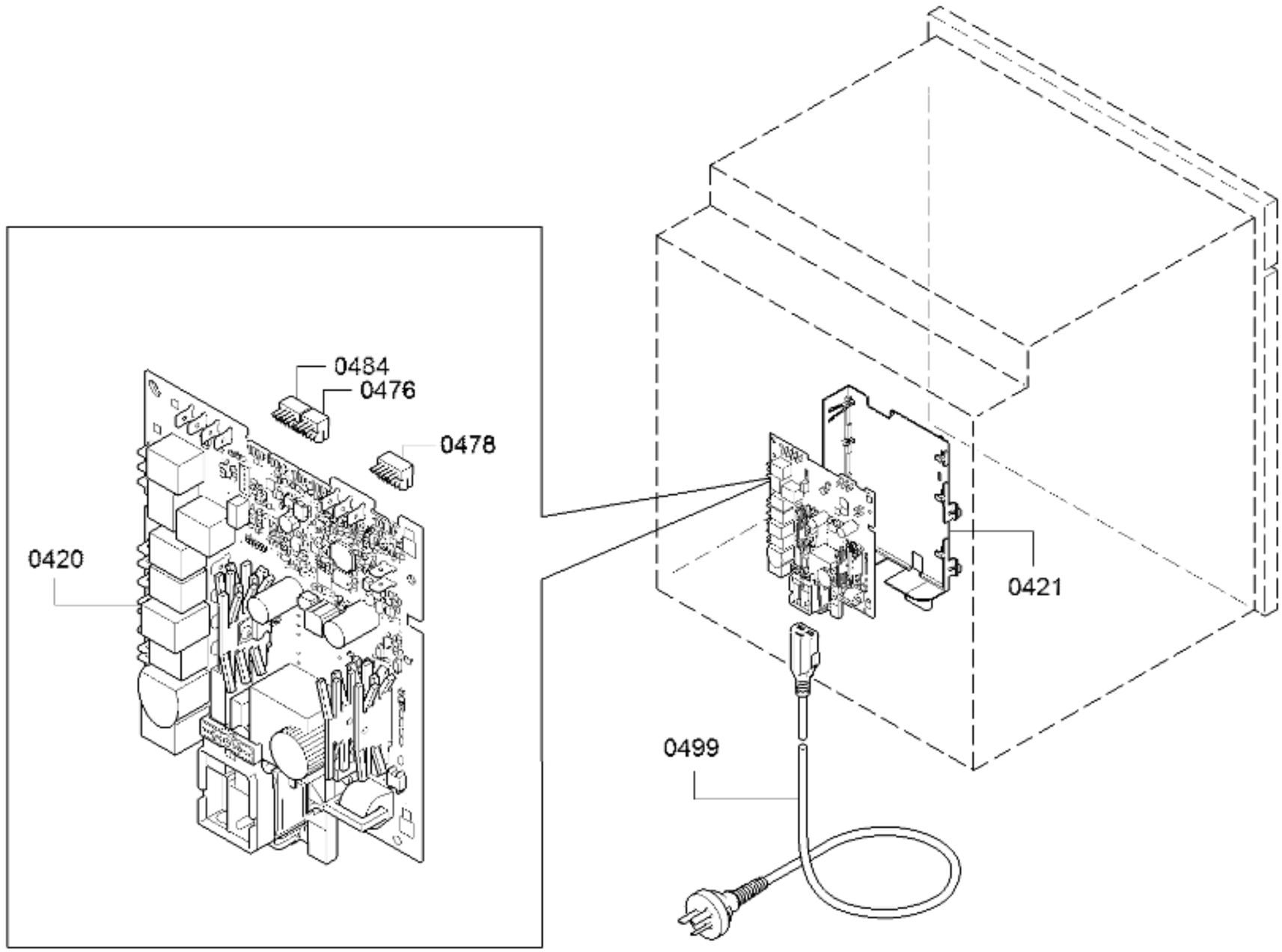


58300000198046 aet 004 a

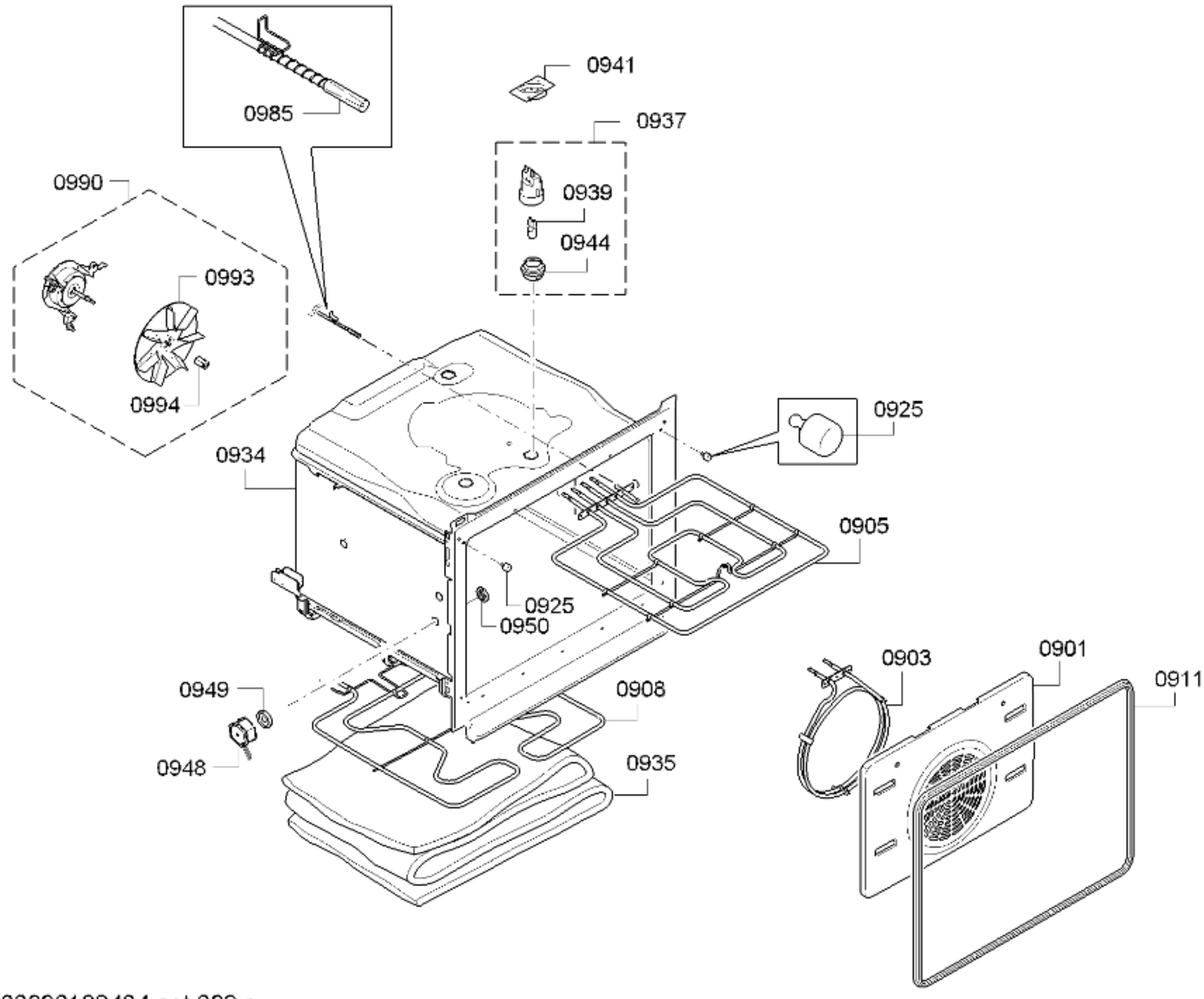


58300000182484 aet 009 a

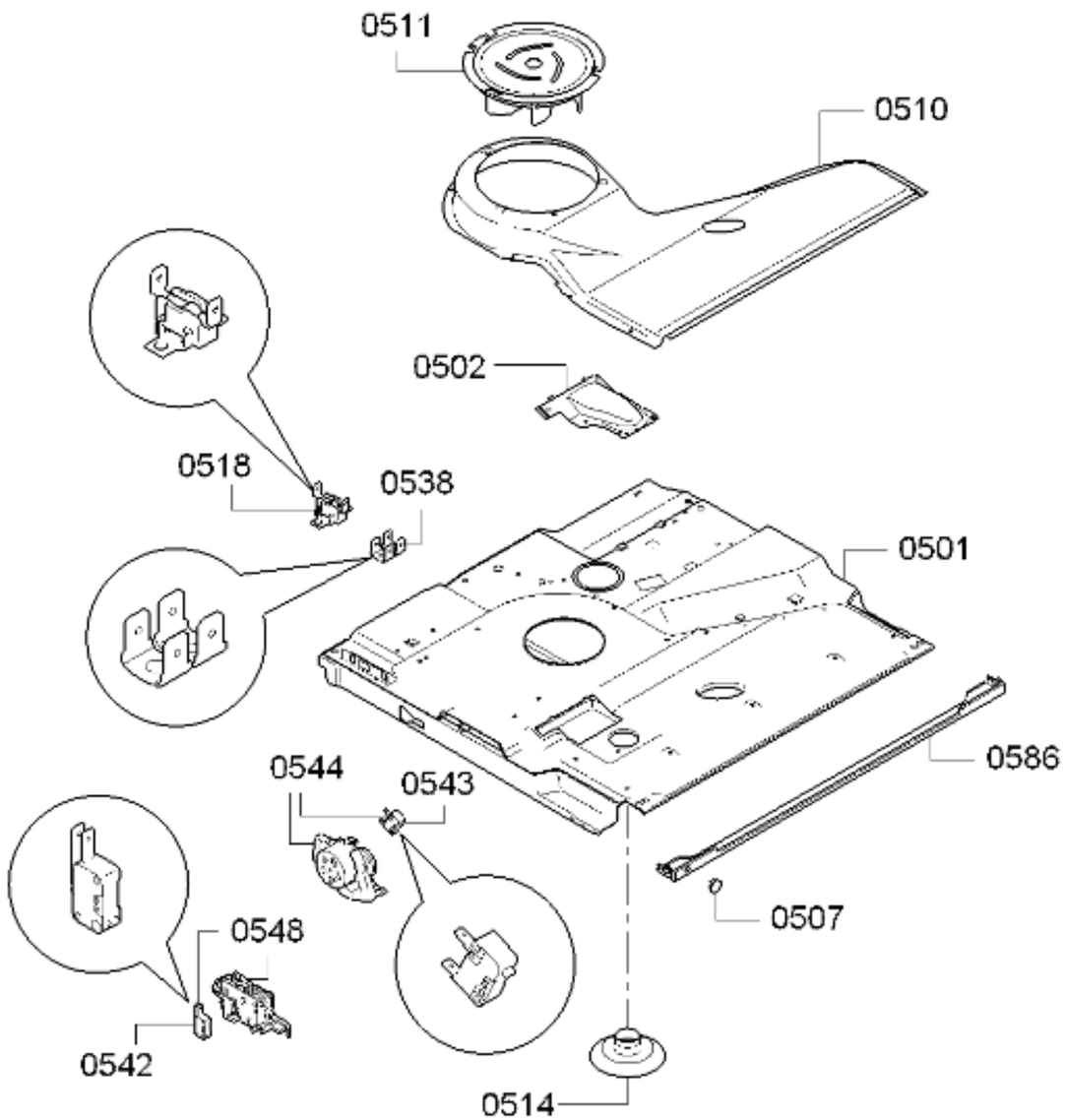


58300000183039_aet_005_a

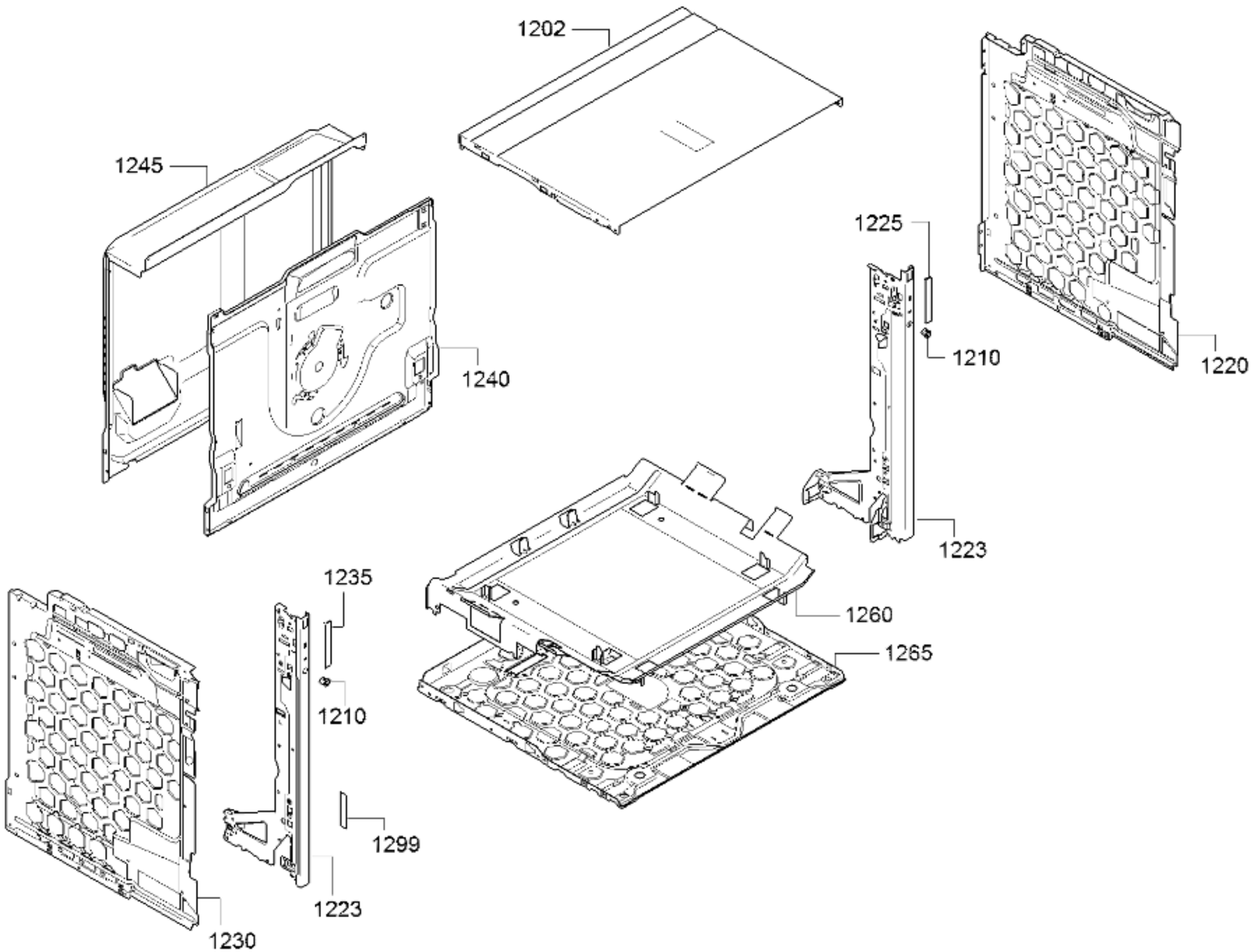


58300000190311 aet 012 c

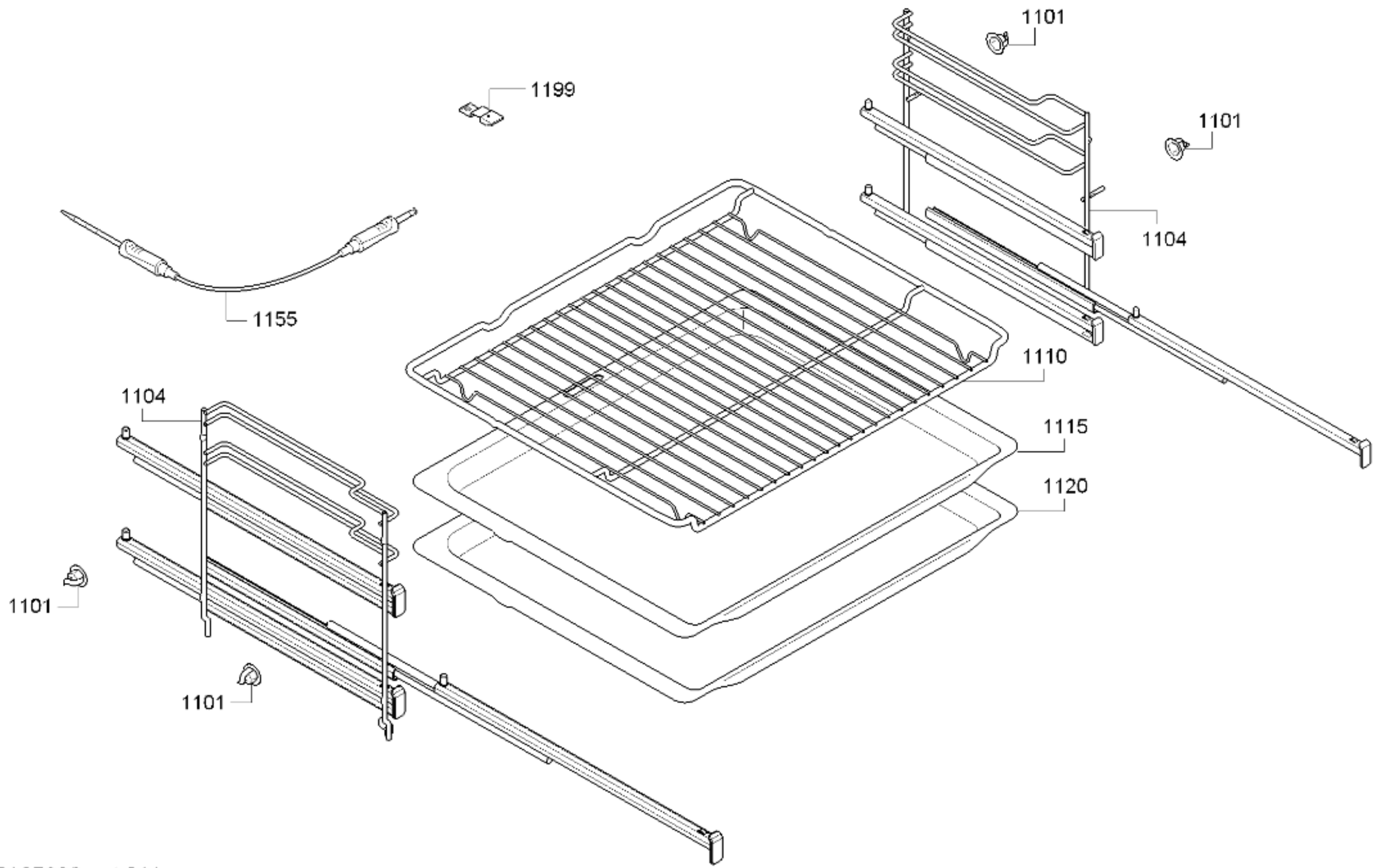


58300000185992 aet 011 a

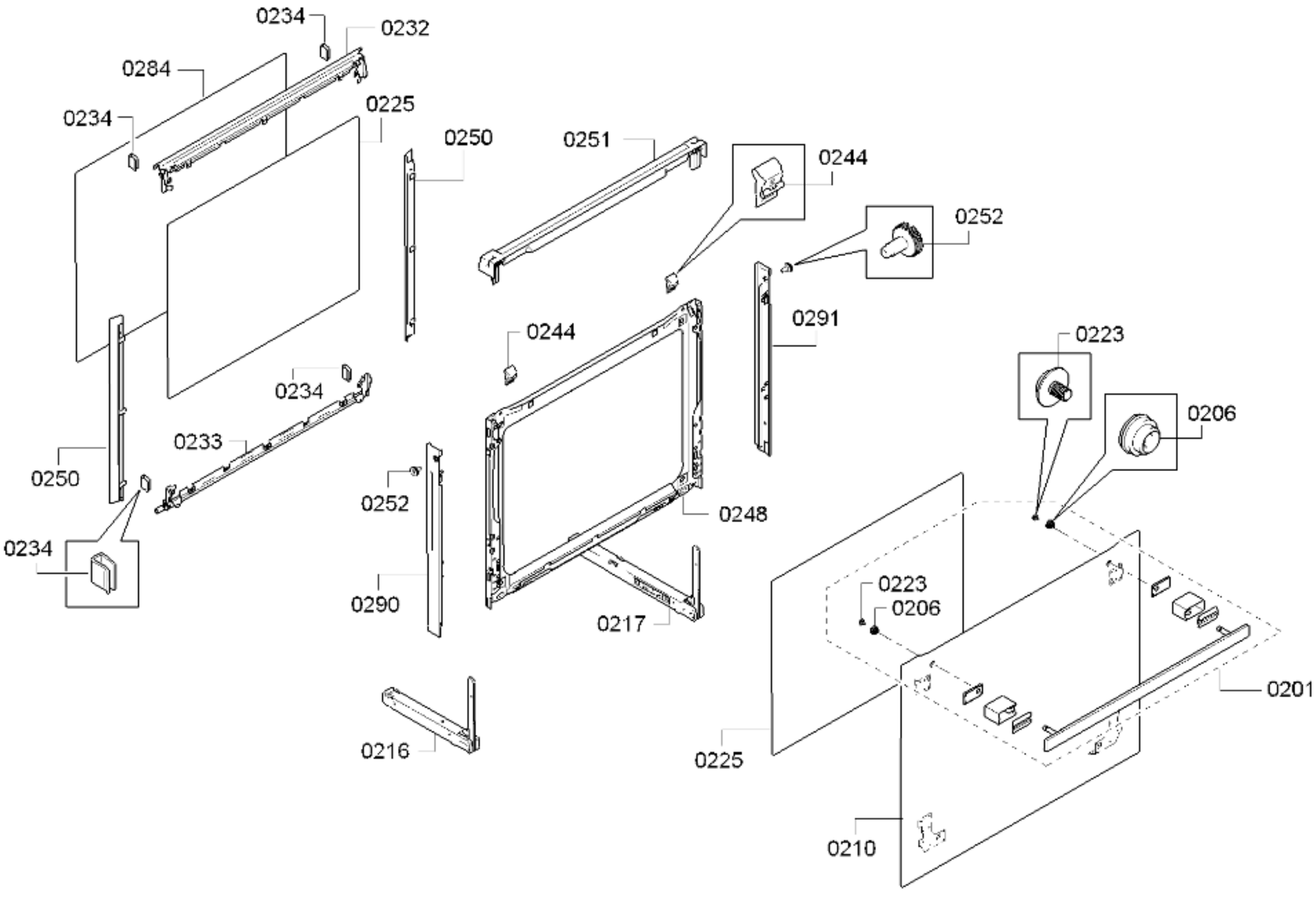


58300000183043 aet 002 c