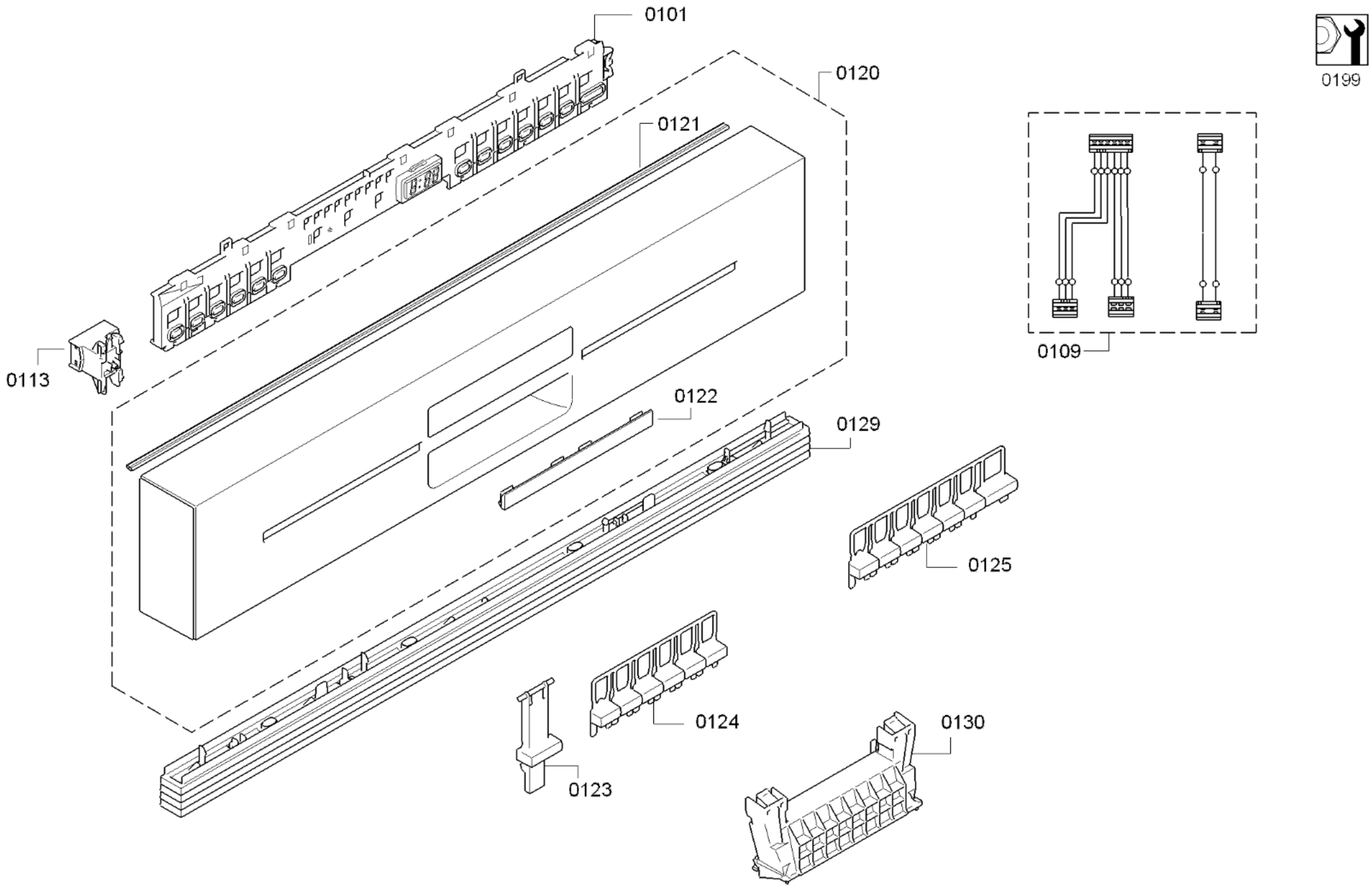

58300000168325 aet 000 a 1/6

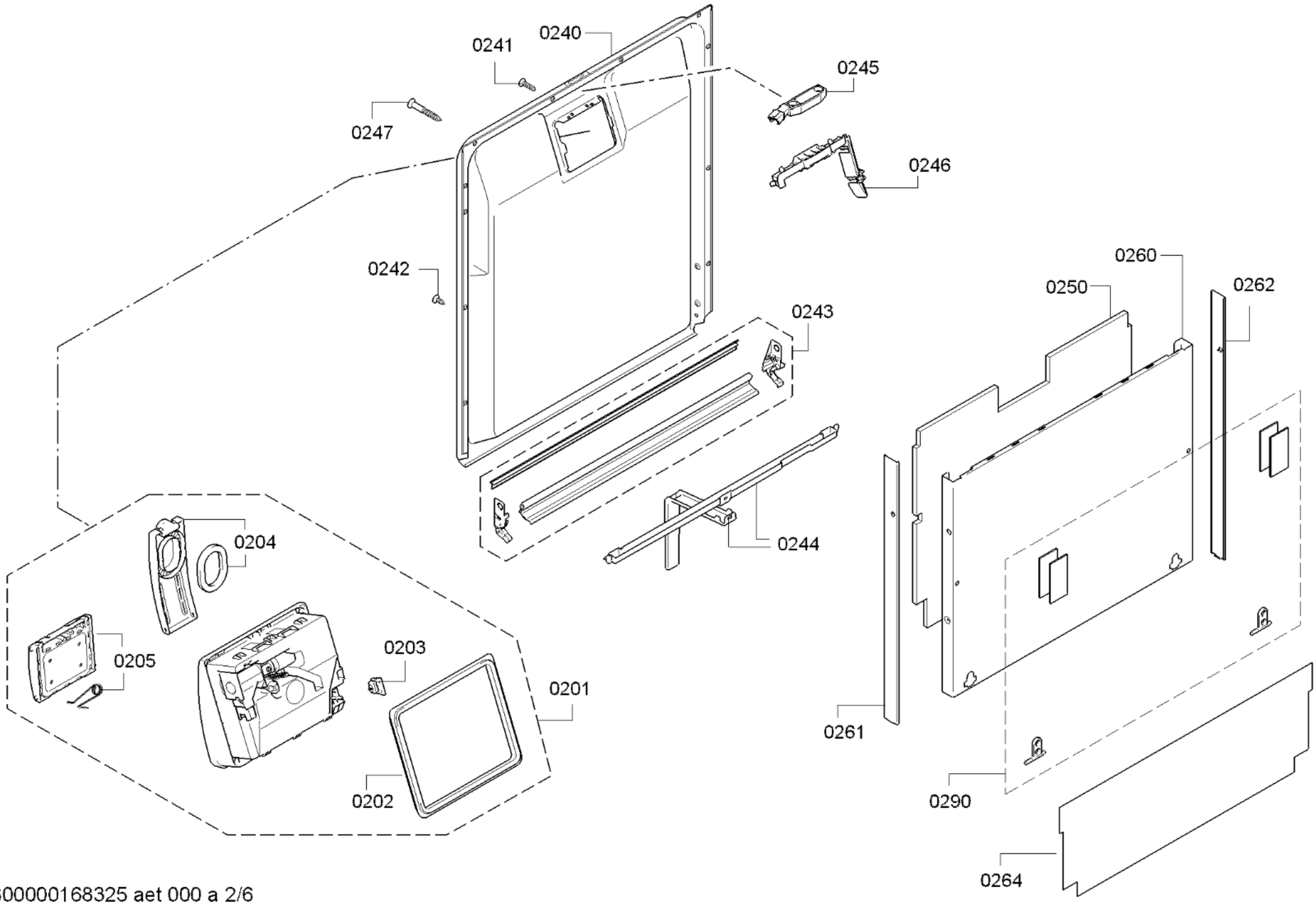

58300000168325 aet 000 a 2/6

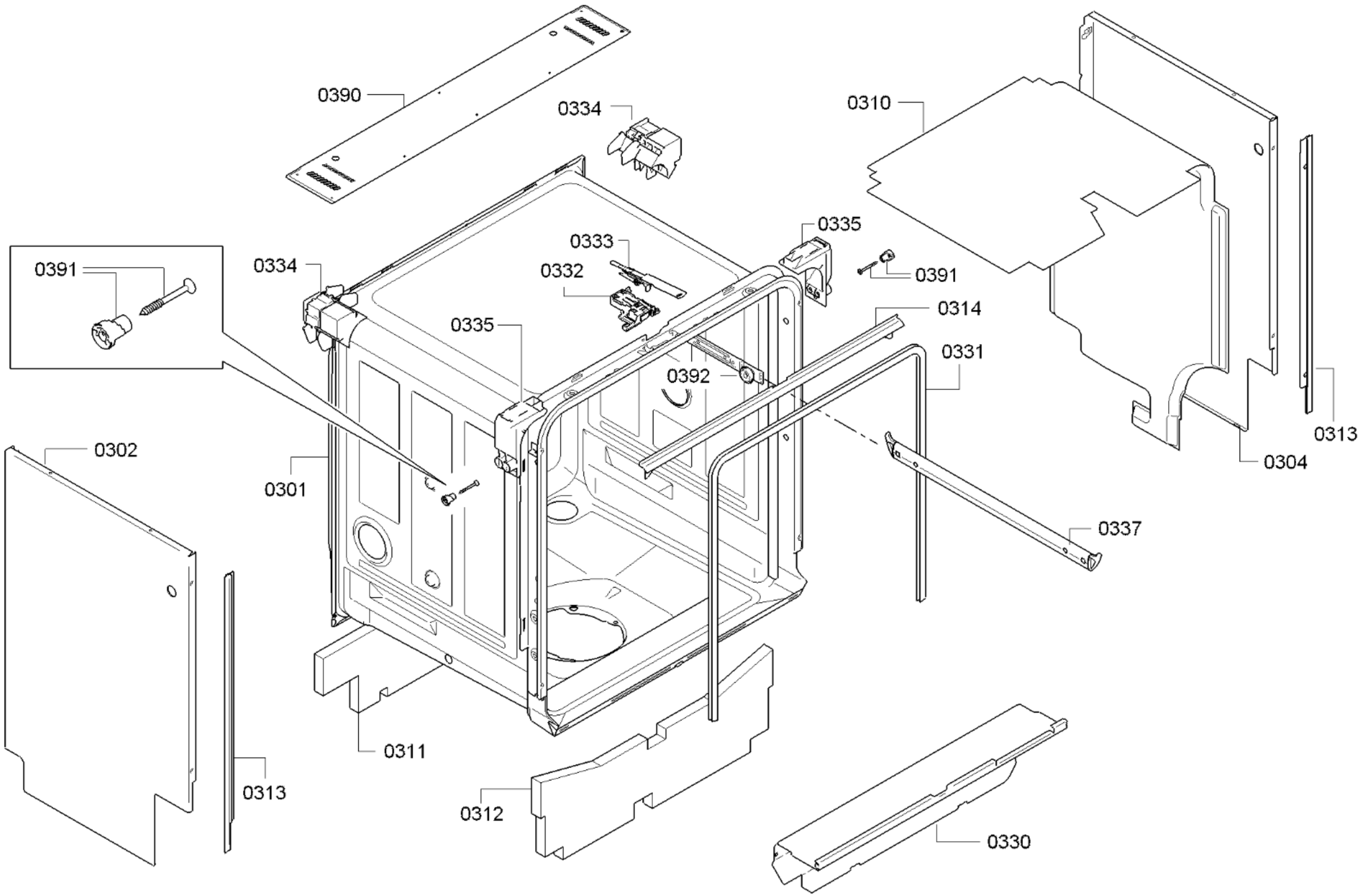

58300000168325 aet 000 a 3/6

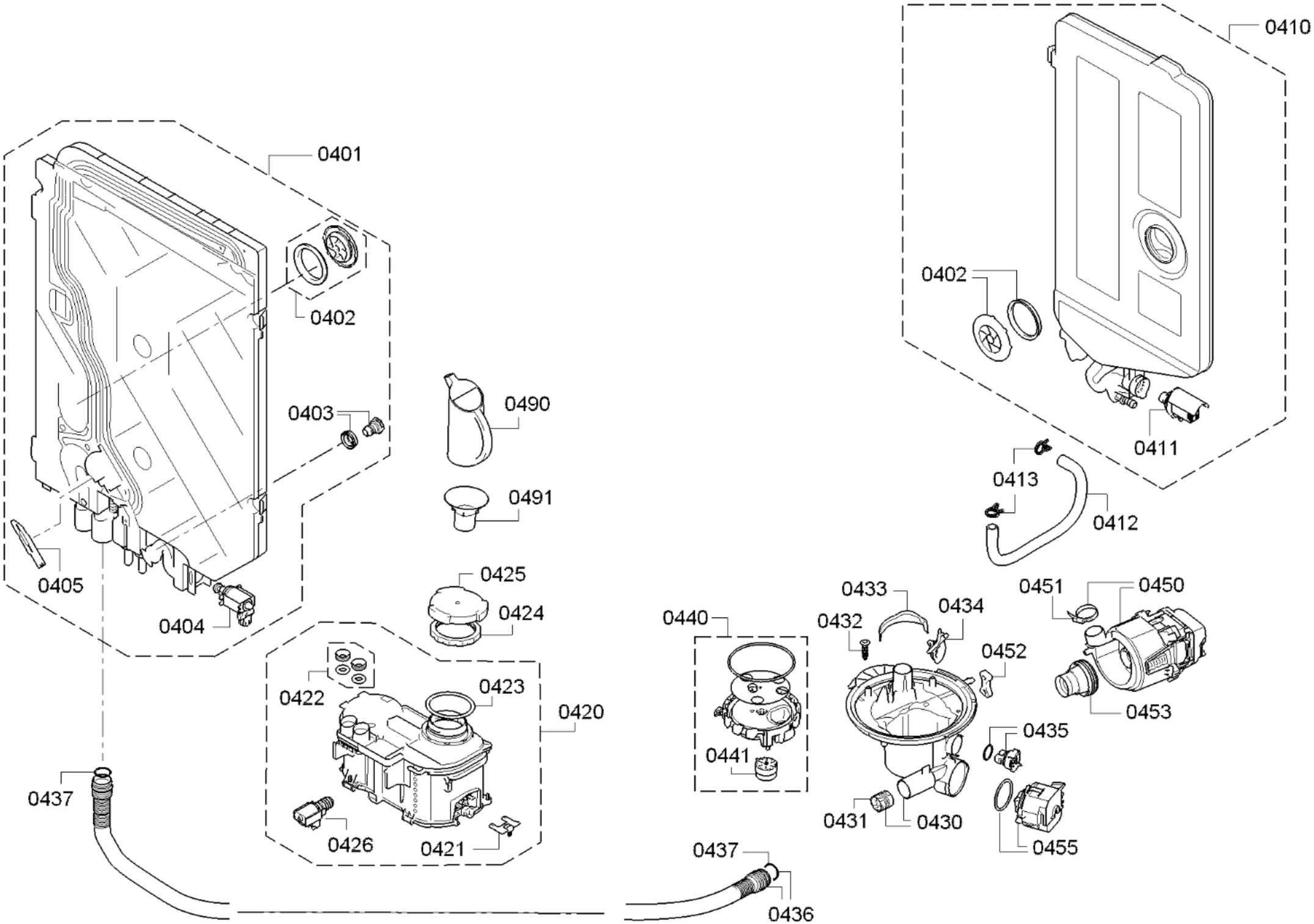

58300000168325 aet 000 a 4/6

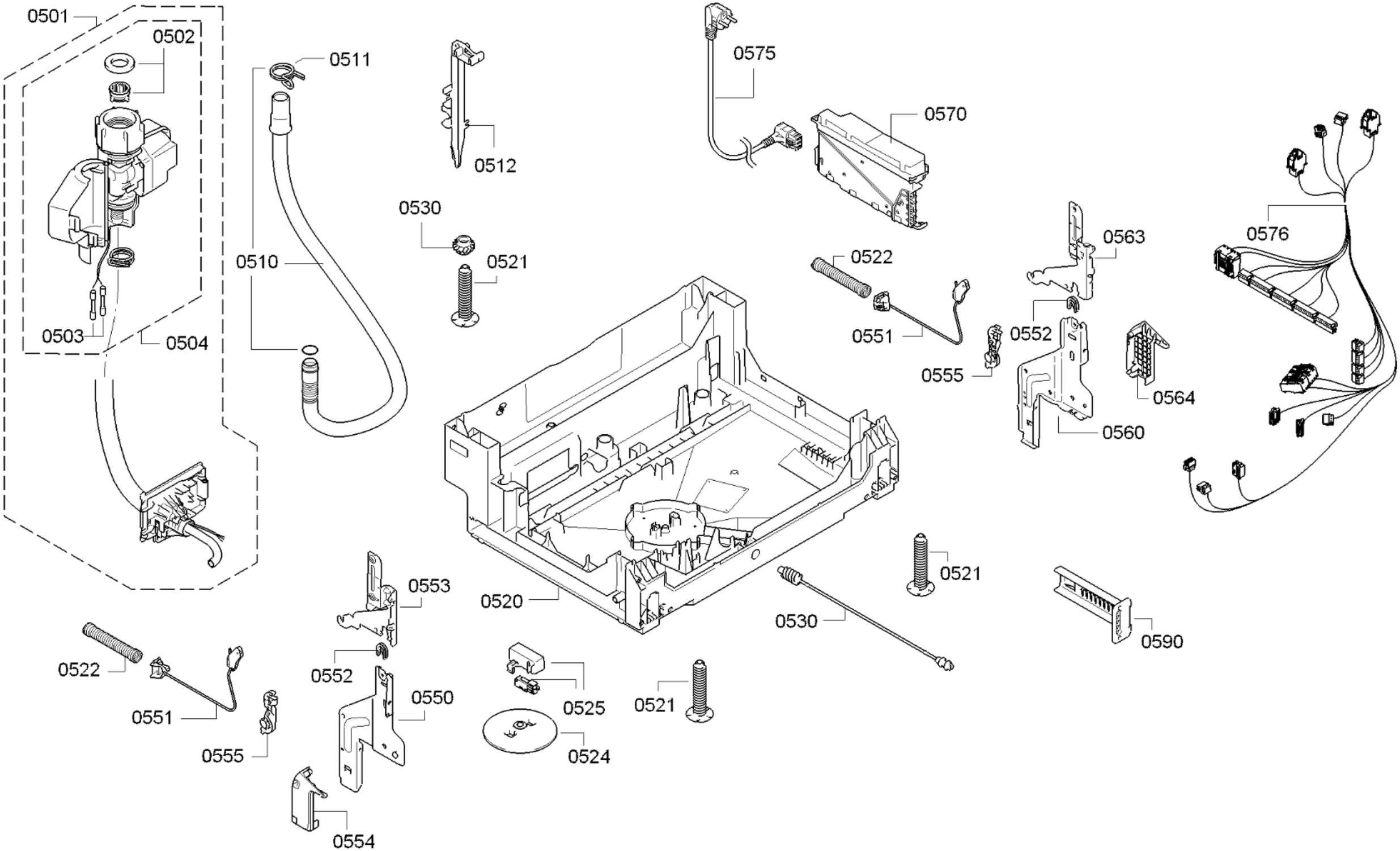

58300000168325 aet 000 a 5/6

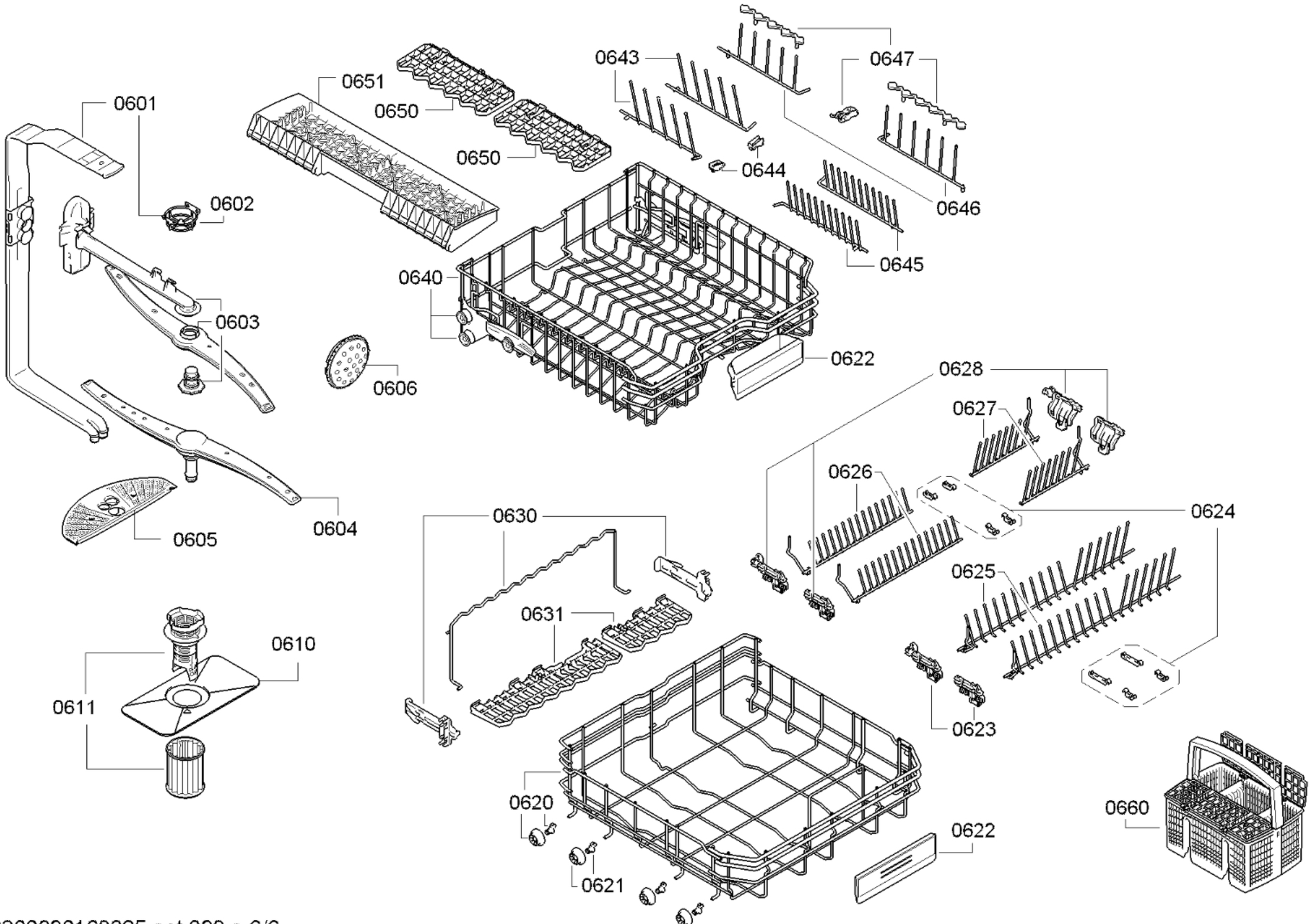

58300000168325 aet 000 a 6/6